Discharge Monitoring Programme

	Waste stream			Firewater Pump Cooling Wastewater Discharge	Stormwater Overflow Discharge	Treated Wastewater Effluent	Produced Formation Water
	Latitude			-14.241289	-14.242255	-14.240915	-14.243388
	Longitude			129.436001	129.436347	129.437845	129.435190
	Monitoring Site Code			**SW-01**	**SW-03**	**WW-02**	**PW-02**
Parameter	**Abbr**	**Unit**	**Analysis Type**	**Frequency**			
Environmental Parameters							
Volume (litres)	Vol	L	In situ	NR	NR	U	U
pH	pH	-		W	U	M	U
Electrical conductivity	EC	µs/cm		W	U	M	U
Dissolved oxygen	DO	% saturation		NR	NR	NR	U
Temperature	T	°C		NR	NR	NR	U
Turbidity	NTU	NTU		NR	NR	NR	U
Biological Oxygen Demand	BOD	mg/L		NR	NR	M	Q
Chemical Oxygen Demand	COD	mg/L		NR	NR	NR	Q
Total Suspended Solids	TSS	mg/L		A	NR	M	M
Total Dissolved Solids	TDS	mg/L		A	NR	M	Q
Total Organic Carbon	TOC	mg/L		NR	NR	M	Q
Oil in Water	OIW	mg/L		W	U	M	U
Nutrient Indicators							
Total Phosphorus	TP	mg/L	Total and filtered (0.45µm)	NR	NR	M	Q
Total Nitrogen	TN			NR	NR	M	Q
Oxidised Nitrogen	NOx		filtered (0.45µm)	NR	NR	NR	Q
Ammoniacal Nitrogen	NH3-N			NR	NR	M	Q
Nitrate	NO3-			NR	NR	NR	Q
Nitrite	NO2-			NR	NR	NR	Q
Bacteriological							
Escherichia coli	E.coli	cfu/100mL	Total	NR	NR	M	NR
Enterococci							
Metals and Metalloids							
Aluminium	Al	µg/L	Total and filtered (0.45ug)	A	A	A	Q
Arsenic	As			A	A	A	Q
Barium	Ba			A	A	A	Q
Beryllium	Be			A	A	A	Q
Boron	B			A	A	A	Q
Cadmium	Cd			A	A	A	Q
Cobalt	Co			A	A	A	Q
Copper	Cu			A	A	A	Q
Chromium III	Cr III			A	A	A	Q
Chromium VI	Cr VI			A	A	A	Q
Iron	Fe			A	A	A	Q
Mercury	Hg			A	A	A	Q

KEY
A = Annually when discharging
M = Monthly when discharging
Q = Quarterly when discharging
U = Upon discharge
W = Weekly when discharging
NR = Not required

Discharge Monitoring Programme

Monitoring Site Code				SW-01	SW-03	WW-02	PW-02
Parameter	**Abbr**	**Unit**	**Analysis Type**		**Frequency**		
Magnesium	Mg	µg/L	Total and filtered (0.45ug)	A	A	A	Q
Manganese	Mn			A	A	A	M
Molybdenum	Mo			A	A	A	Q
Lead	Pb			A	A	A	Q
Nickel	Ni			A	A	A	Q
Selenium	Se			A	A	A	Q
Tin	Sn			A	A	A	Q
Zinc	Zn			A	A	A	M
Radiological analysis							
Radium Isotopes (Ra-226 and Ra-228)		mBq/L		NR	NR	NR	A
Surfactants							
Methyl Blue Active Substances	(MBAS)	µg/L		NR	NR	NR	Q
Speciated Phenols							
Phenol		µg/L	Total	NR	NR	NR	M
Pentachlorophenol							Q
2-Chlorophenol				NR	NR	NR	Q
2-Methylphenol (O-Cresol)				NR	NR	NR	Q
4-Methylphenol				NR	NR	NR	Q
2-Nitrophenol				NR	NR	NR	Q
Ethyl/Dimethylphenols				NR	NR	NR	Q
Benzoic acid				NR	NR	NR	Q
2,4-Dichlorophenol				NR	NR	NR	Q
2,6-Dichlorophenol				NR	NR	NR	Q
4-Chloro-3-Methylphenol				NR	NR	NR	Q
2,4,6-Trichlorophenol				NR	NR	NR	Q
2,4,5-Trichlorophenol				NR	NR	NR	Q
2,4-Dinitrophenol				NR	NR	NR	Q
4-Nitrophenol				NR	NR	NR	Q
2,3,4,5-Tetrachlorophenol				NR	NR	NR	Q
2,3,4,6-Tetrachlorophenol				NR	NR	NR	Q
4,6-Dinitro-o-cresol				NR	NR	NR	Q
Hydrocarbons							
Total Petroleum Hydrocarbons	TPH	µg/L	Total	A	NR	Q	M
Polycyclic Aromatic Hydrocarbons (16 designated Priority Pollutants by the World Health Organisation)	PAH			A	NR	A	M
Benzene				A	NR	Q	M

KEY
A = Annually when discharging
M = Monthly when discharging
Q = Quarterly when discharging
U = Upon discharge
W = Weekly when discharging
NR = Not required

Discharge Monitoring Programme

Toluene				A	NR	Q	M
Ethyl benzene				A	NR	Q	M
m+p-xylene				A	NR	Q	M
Naphthalene				A	NR	Q	M
Anthracene				A	NR	Q	M
Fluoranthene				A	NR	Q	M
Benzo(a)pyrene				A	NR	Q	M
Xylene				A	NR	Q	M
Aliphatic / Aromatic Split (%)				NR	NR	Q	M

KEY
A = Annually when discharging
M = Monthly when discharging
Q = Quarterly when discharging
U = Upon discharge
W = Weekly when discharging
NR = Not required

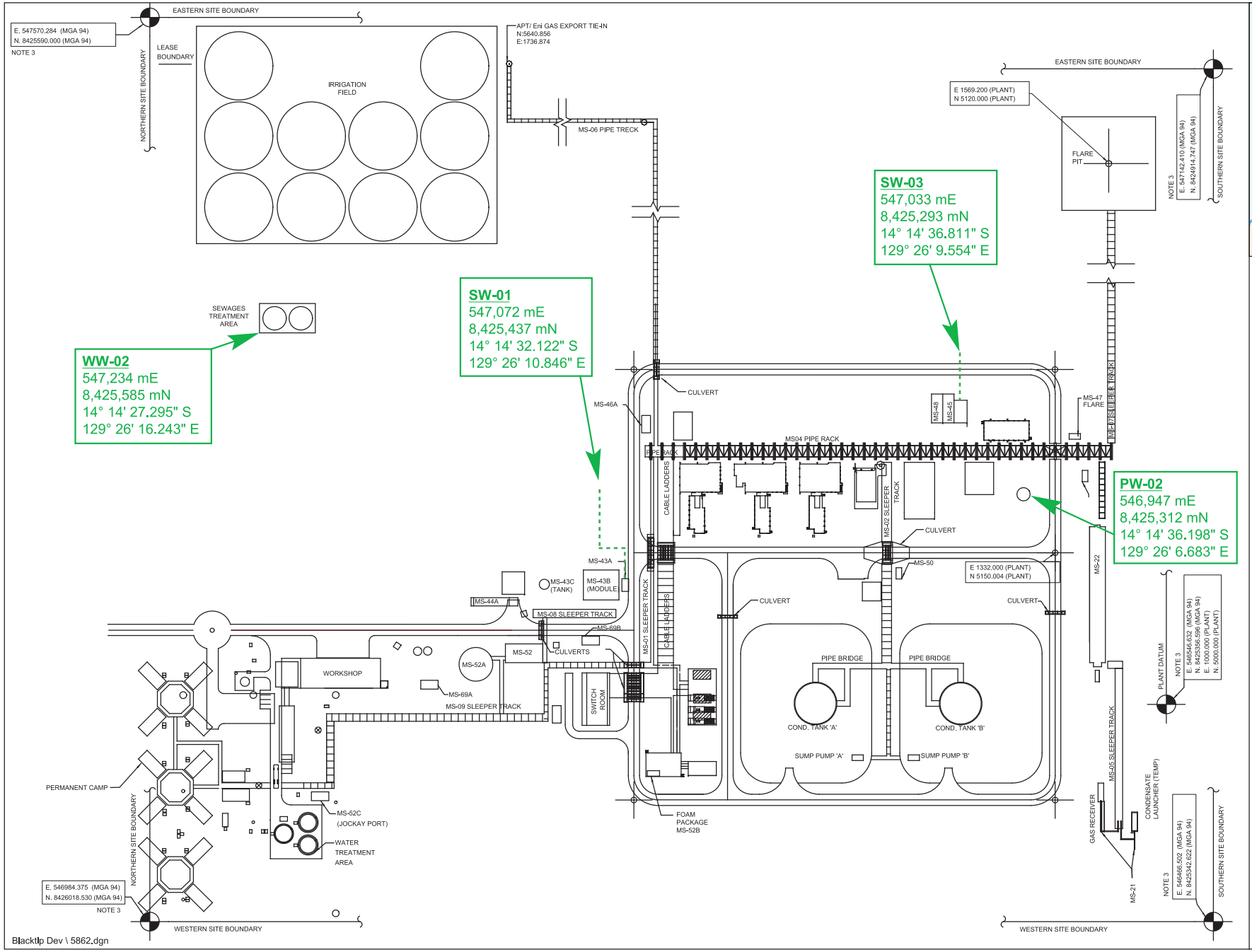

LOCALITY MAP

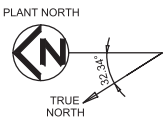

0 20 40 60 80 100m

GDA94 - MGA 52

Water Sampling Points

5862-2.dgn

Wastewater discharge limits and trigger values

			Monitoring site code							
			SW-01		SW-03		WW-02		PW-02	
Parameter	**Abbr**	**Unit**	**Trigger value**	**Limit**	**Trigger value**	**Limit**	**Trigger value**	**Limit**	**Trigger value**	**Limit**
pH	pH	pH						<6.5[1] >8.5[1]		<6.5[1] >8.5[1]
Biological oxygen demand	BOD	mg/L					10[1]	20[1]		
Total Suspended Solids	TSS	mg/L					10[1]	30[1]	10[1]	50
Escherichia coli	E.coli	cfu/100mL					100[1]	1000[1]		
Copper	Cu	µg/L							3[3]	8[2]
Manganese	Mn	µg/L								80[2]
Zinc	Zn	µg/L							23[3]	43[2]
Benzene		µg/L							1300[3]	2000[2]

[1] Guidelines for Management of Recycled Water Systems, Northern Territory Department of Health 2014

[2] 80% species protection trigger levels, Australian and New Zealand Guidelines for Marine Water Quality 2000

[3] 90% species protection trigger levels, Australian and New Zealand Guidelines for Marine Water Quality 2000

[4] Schedule of Specific Requirements as to Offshore Petroleum Exploration and Production, NOPSEMA 1995

Wastewater discharge limits and trigger values

Toluene		µg/L								330[2]
Ethyl benzene		µg/L								160[2]
m+p-xylene		µg/L								150[2]
Naphthalene		µg/L								120[2]
Anthracene		µg/L								7[2]
Fluoranthene		µg/L								2[2]
Benzo(a)pyrene		µg/L								0.7[2]
Phenol		µg/L								1200[2]
Pentachlorophenol		µg/L								55[2]
Oil in Water	OIW	mg/L	1	6	1	6	6	10	6	25[4]

[1] Guidelines for Management of Recycled Water Systems, Northern Territory Department of Health 2014

[2] 80% species protection trigger levels, Australian and New Zealand Guidelines for Marine Water Quality 2000

[3] 90% species protection trigger levels, Australian and New Zealand Guidelines for Marine Water Quality 2000

[4] Schedule of Specific Requirements as to Offshore Petroleum Exploration and Production, NOPSEMA 1995